# Operating instructions

## Load handling device

### Type: Powertwister® PT 080 & PT 315




COM-Tec® GmbH
Eugen-Langen-Straße 4
D-76227 Karlsruhe / Germany

Phone: +49 (0) 721 / 750 93 55 - 0
Fax: +49 (0) 721 / 750 93 55 - 9
Internet: http://www.comtecgmbh.de
E-mail: info@comtecgmbh.de

Edition 30.09.2021
Original operating instructions



**NOTE**

***Important! - Read carefully before use - Keep for later use!***

*These operating instructions are an integral part of the Powertwister® and must be available to operating and maintenance personnel at all times.*

*The safety instructions contained therein must be observed.*

*If the Powertwister® is resold, this operating manual must always be supplied with it.*

*The current version can be found on the manufacturer's website: http://www.comtecgmbh.de*

**Warranty and guarantee provisions:**
See chapter 7.3, warranty provisions.

The **warning and safety symbols** are explained in chapters 3.1 and 3.1.1.

**Translation**
For delivery to countries of the EEA, the operating instructions must be translated accordingly into the language of the country of use. If there are any discrepancies in the translated text, the original operating instructions (German) should be consulted for clarification or the manufacturer should be contacted.

**Copyright**
Distribution and reproduction of this document, processing and communication of its contents are prohibited unless expressly authorised. Infringements oblige user to compensate the company.
All rights reserved.

# 1 Content

## 1.1 Table of contents


| | | |
|---|---|---|
| **1** | **Content** | **3** |
| 1.1 | Table of contents | 3 |
| 1.2 | List of figures | 4 |
| 1.3 | List of tables | 4 |
| 1.4 | Declaration of conformity | 5 |
| **2** | **Overview and intended use** | **6** |
| 2.1 | Overview PT 080 | 6 |
| 2.1.1 | Overview PT 315 | 7 |
| 2.1. 2 | Overview transport / storage case | 8 |
| 2.1.3 | Powertwister® insertion PT 080 & PT 315 | 9 |
| 2.1.4 | Drum PT 080 & PT 315 | 10 |
| 2.2 | Intended use | 11 |
| 2.2.1 | Reasonably foreseeable misuse | 11 |
| 2.3 | Technical data | 12 |
| 2.3.1 | Product-specific data | 12 |
| 2.3.2 | Dimensions and weight | 12 |
| 2.3.3 | General data | 12 |
| 2.3.4 | Marking (name plate) | 13 |
| **3** | **Safety** | **14** |
| 3.1 | Notes and explanations | 14 |
| 3.1.1 | Explanation of the safety symbols used | 15 |
| 3.2 | Cleaning, maintenance or repair work | 17 |
| 3.3 | Safety measures (to be carried out by the operator) | 18 |
| 3.4 | Obligations of the operator | 18 |
| 3.5 | Safety checks | 20 |
| 3.6 | Safety controls | 20 |
| **4** | **General hazard warnings** | **21** |
| 4.1 | Hazards | 21 |
| 4.2 | Hazard areas on the Powertwister® | 21 |
| 4.3 | Operating and maintenance personnel | 21 |
| 4.4 | Installation of spare and wear parts | 22 |
| **5** | **Installation** | **23** |
| 5.1 | Scope of delivery | 23 |
| 5.2 | Transport and packaging | 23 |
| 5.2.1 | Technical data for transport | 24 |
| 5.3 | Storage after use or dismantling | 24 |
| **6** | **Operation** | **25** |
| **7** | **Maintenance / Cleaning / Repair / Testing** | **26** |
| 7.1 | Cleaning, maintenance, repair and testing | 27 |
| 7.2 | Checks / tests | 28 |
| 7.3 | Warranty provisions | 29 |
| **8** | **Malfunction, cause, remedy** | **30** |
| **9** | **Emergency** | **31** |
| **10** | **Dismantling / disposal** | **31** |

## 1.2 List of figures


| | | |
|---|---|---|
| Fig. 2-1 | "PT 080" | 6 |
| Fig. 2-2 | "PT 315" | 7 |
| Fig. 2-3 | "Transport / storage case" | 8 |
| Fig. 2-4 | "Powertwister® insertion PT 080 & PT 315" | 9 |
| Fig. 2-5 | "Drum PT 080 & PT 315" | 10 |
| Fig. 5-1 | Scope of delivery of the Powertwister® | 23 |


## 1.3 List of tables


| | | |
|---|---|---|
| Tab. 1 | Weights | 24 |
| Tab. 2 | Cleaning | 27 |
| Tab. 3 | Maintenance | 27 |
| Tab. 4 | Repairs | 28 |
| Tab. 5 | Malfunction - Cause - Remedy | 30 |

## 1.4 Declaration of conformity

COM-Tec® GmbH
Eugen-Langen-Straße 4
D-76227 Karlsruhe / Germany

# Declaration of conformity

according to

- **EC Machinery Directive 2006/42/EC**

We hereby declare that the design of

**Designation:** Powertwister®

**Series no.:** PT 080 & PT 315

complies with the above guidelines in the supplied version and the DIN EN standards listed below. Harmonised standards according to the Official Journals of the Directives:

| Directive / standard | Title |
|---|---|
| DIN EN 82079-1:2012 | Drafting of instruction handbooks - Structure, content and presentation - Part 1: General principles and detailed requirements (IEC 82079-1:2012) |
| **2006/42/EC** | **EC Directive: Machine** *valid from 29.12.2009* |
| DIN EN ISO 12100 :2010 + Corr. 1 | Safety of machinery - General principles for design - Risk assessment and risk reduction (German version EN ISO 12100:2010 + Corrigendum to DIN EN ISO 12100:2011-03) |
| DIN EN 13155:2003 + A2:2009 | Cranes - Safety - Non-fixed load lifting attachments |

- This declaration applies only to the load lifting attachment in the condition in which it was placed on the market.
- The essential health and safety requirements set out in *Annex I* of the Machinery Directive *2006/42/EC* are applied and complied with.
- The specific technical documentation referred to in *Annex VII A* has been drawn up and shall be sent in electronic form to the national competent authority on request.
- Authorised person for the compilation of the technical documentation:
  Name: Mr. Becker
  Address: Eugen-Langen-Straße 4, D-76227 Karlsruhe / Germany

Karlsruhe, 30.09.2021 .....

Signature of person with business responsibility (Mr. Beyer)

# 2 Overview and intended use

## 2.1 Overview PT 080

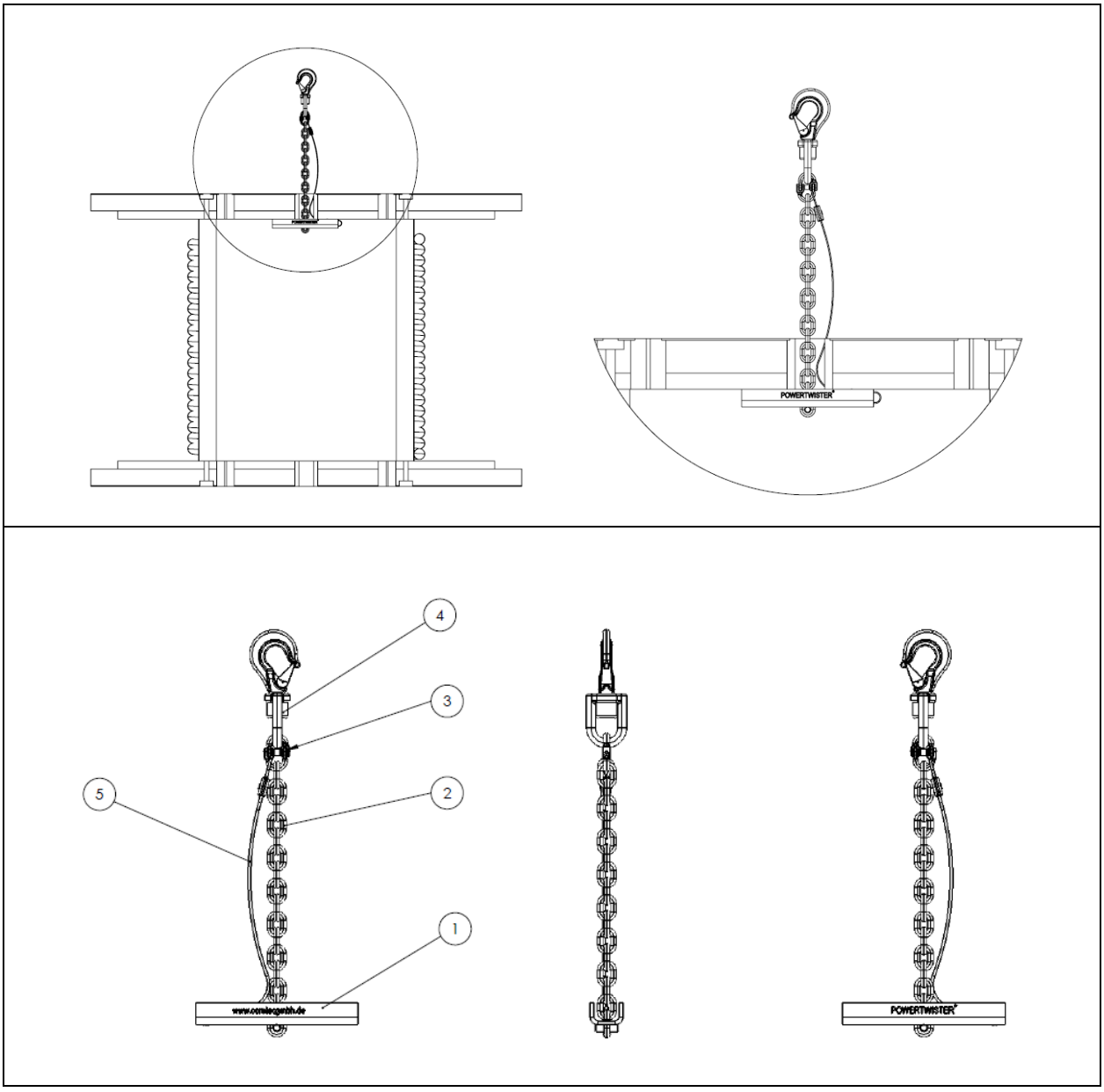


*Fig. 2-1 "PT 080"*

| The load handling device consists of the following main components: | | | |
|---|---|---|---|
| Pos no. | Designation | Description | Qty |
| 1 | PT_080 U profile | CT-3-2020-08.2 | 1 |
| 2 | PT_080 chain | Chain 8x24 EN 818-2-8 black GT8 | 1 |
| 3 | PT_080 link | Link 8-8 DIN EN 1 677-1 GT8 2t | 1 |
| 4 | PT_080 hook | Swivel hook with ball bearing load capacity 1.12 t | 1 |
| 5 | PT_080 pull cable | CT-1-2020-080.3 | 1 |

### 2.1.1 Overview PT 315

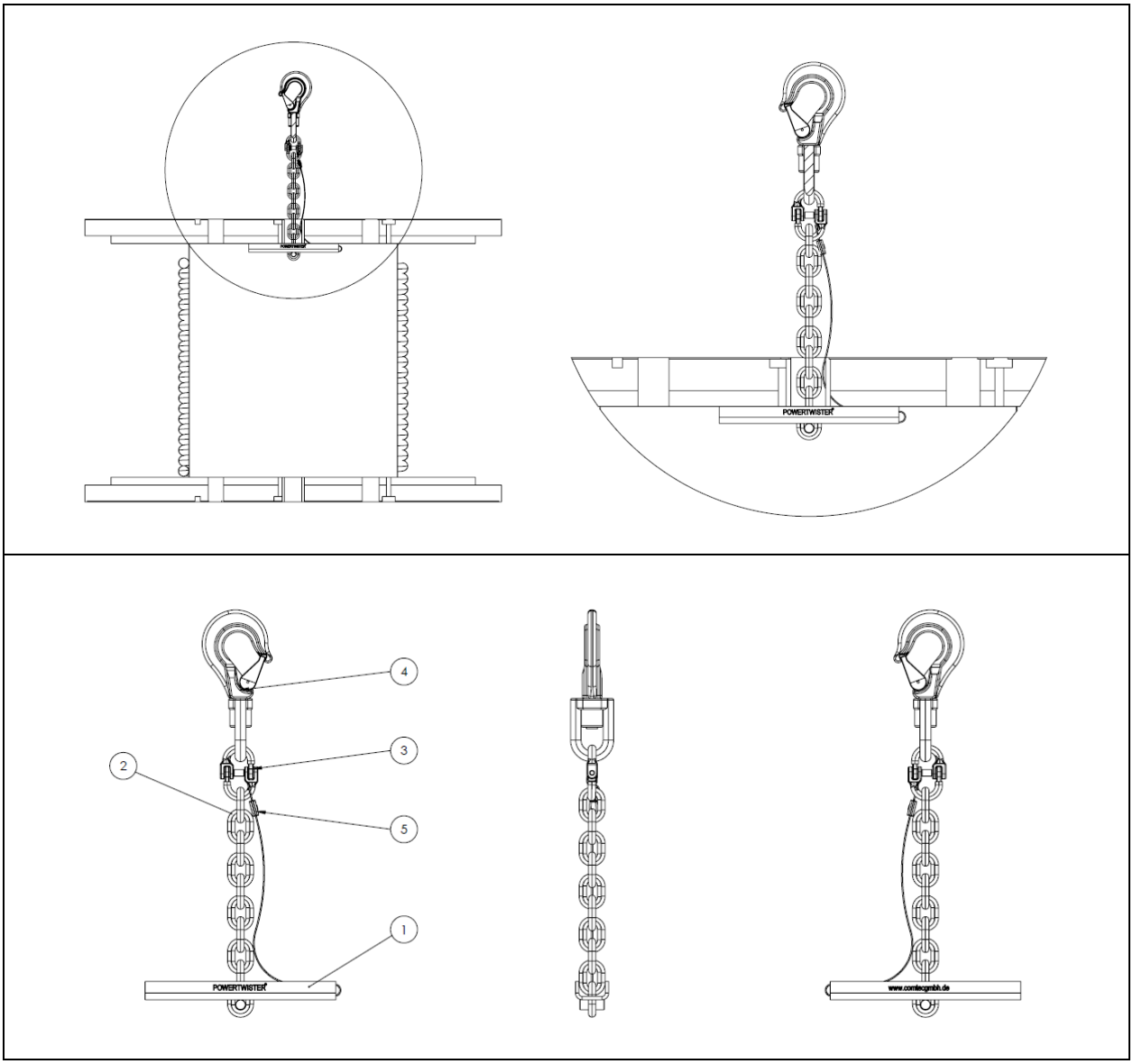


*Fig. 2-2 "PT 315*

| The load handling device consists of the following main components: | | | |
|---|---|---|---|
| Pos no. | Designation | Description | Qty |
| 1 | PT_315 U profile | CT-3-2020-315.2 | 1 |
| 2 | PT_315 chain | Chain 13x39 EN 818-2-8 black GT 8 | 1 |
| 3 | PT_315 link | Link 10-8 DIN EN 167-1 GT8, 3.15t | 1 |
| 4 | PT_315 hook | Swivel hook with ball bearing load capacity 3.15 t | 1 |
| 5 | PT_315 pull cable | CT-1-2020-315.3 | 1 |

### 2.1.2 Overview transport / storage case







*Fig. 2-3 "Transport / storage case"*

### 2.1.3 Powertwister® insertion PT 080 & PT 315

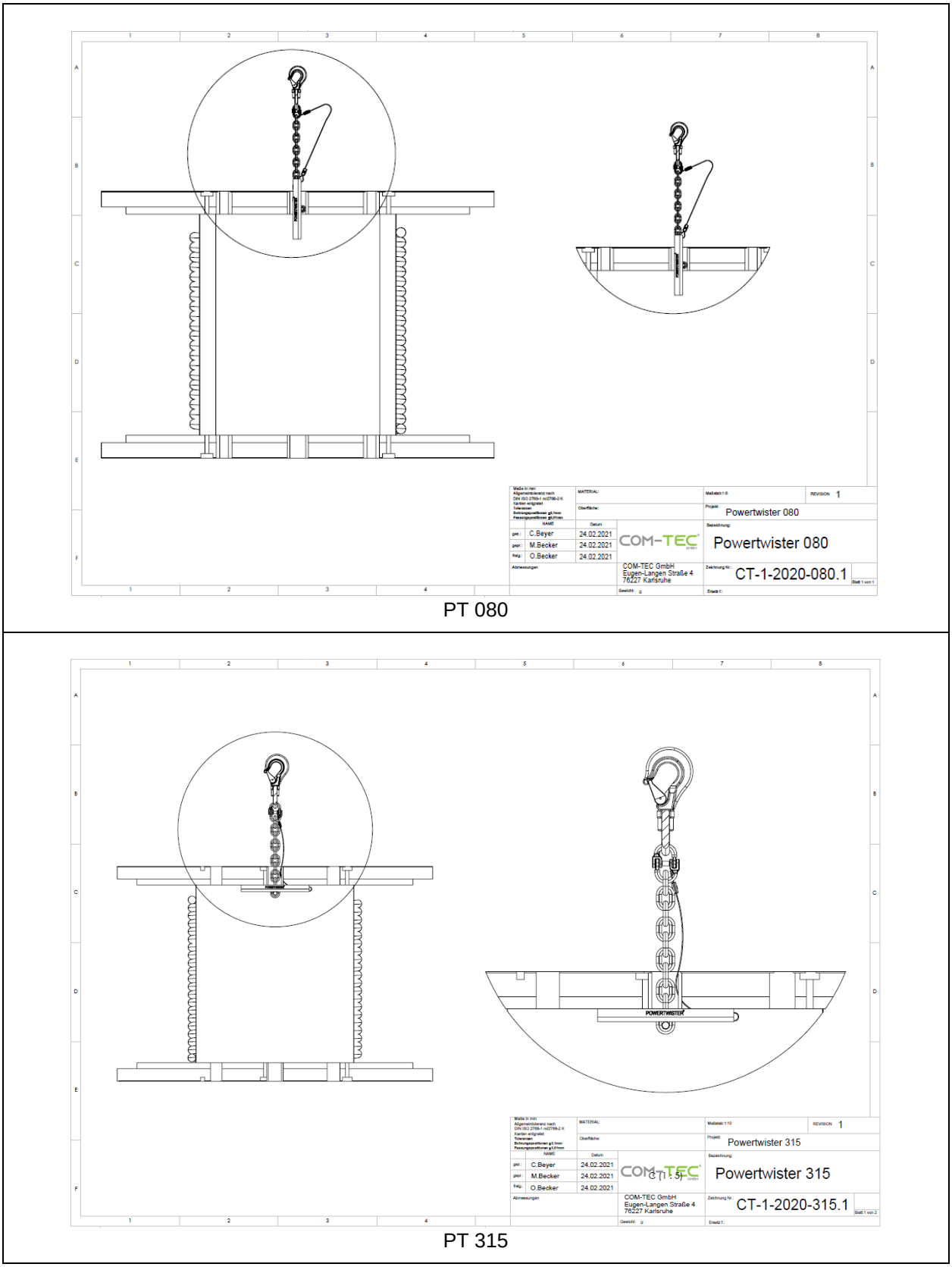


*Fig. 2-4 "Powertwister® insertion PT 080 & PT 315"*

### 2.1.4 Drum PT 080 & PT 315

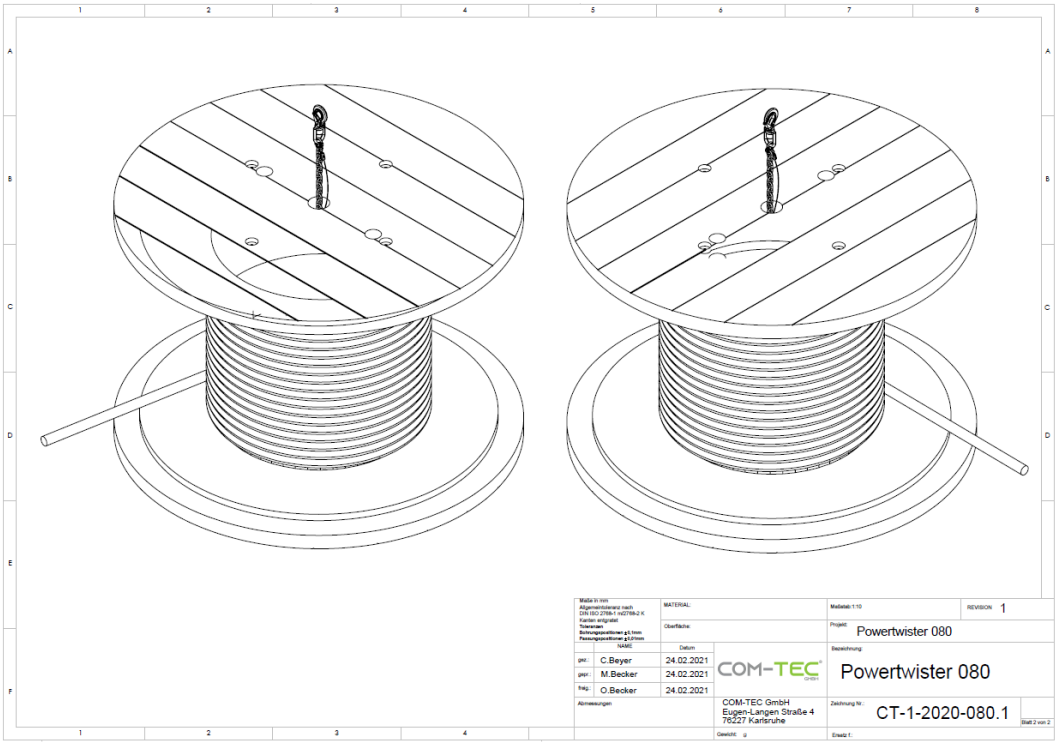


PT 080

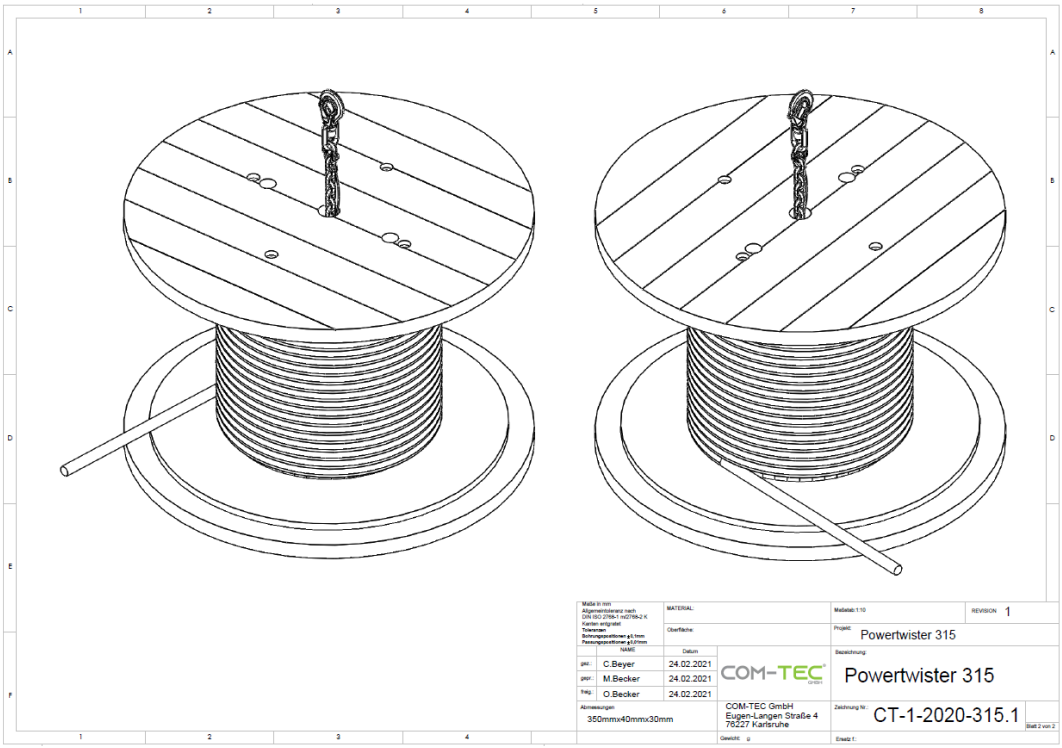


PT 315

*Fig. 2-5 "Drum PT 080 & PT 315"*

## 2.2 Intended use

The Powertwister® PT 080 & PT 315 "load handling device" is used to pick up loads.



***DANGER***

*This Powertwister® has been designed exclusively for the purpose listed above. Any other use or modification of the Powertwister ® beyond the scope of this manual is prohibited® without written agreement with the manufacturer is considered improper use.*
*Conversion without written agreement will result in* ***fatal or serious injuries****.*

*The manufacturer is not liable for any damage resulting from this. The risk is borne solely by the operator. The Powertwister® must not be put into operation until it has been ensured that all safety devices are installed and functional.*

Intended use also includes compliance with the operating and maintenance instructions as well as the servicing and maintenance conditions prescribed by the manufacturer.

### 2.2.1 Reasonably foreseeable misuse

Full-surface support of the U-iron in the drum required, no canting.
Do not exceed the max. load capacity of the load handling device.
Do not use damaged drums and load handling devices.

## 2.3 Technical data

### 2.3.1 Product specific data



**DANGER**

*The materials to be used for the intended operation of the Powertwister® are procured and used by the operator of the Powertwister®. The proper handling of these materials and the associated dangers are his sole responsibility.*

***Failure to do so will result in death or serious injury.***

*Hazard and disposal information must be provided by the operator.*



**NOTE**

*The Powertwister® has a projected lifetime of*

*10 years.*

### 2.3.2 Dimensions and weight

PT 080
Own weight: approx. 2.6 kg
With case: approx. 3.5 kg
Load capacity: max. 0.8 t

PT 315
Own weight: approx. 6.2 kg
With case: approx. 7.6 kg
Load capacity: max. 3.15 t

### 2.3.3 General data

**Working temperature range:**
Temperature range Powertwister®: - 5° to + 40° C

### 2.3.4 Marking (nameplate)

**NOTE**

*The information in these operating instructions only applies to the load handling device whose type designation is given on the title page. The type plate with the type designation is located on the inside of the U-profile of the load handling device.*







*Important for all queries is the correct specification of:*
*- the designation Powertwister® PT 080 & PT 315*

*This is the only way to ensure flawless and fast processing.*

# 3 Safety

## 3.1 Notes and explanations



***DANGER***

*"DANGER" warns of dangerous situations. Avoid these dangerous situations!*

***Failure to do so will result in death or serious injury.***



***WARNING***

*"WARNING" warns of dangerous situations. Avoid these dangerous situations!*

***Failure to do so may result in death or serious injury.***



***CAUTION***

*"CAUTION" in conjunction with the warning symbol warns of dangerous situations. Avoid these dangerous situations!*

***Failure to do so may result in small or minor injuries.***



***NOTE***

*"NOTE" gives you recommended actions that, if ignored, will **not result in personal injury**.*

*However, follow the recommended actions to **avoid property damage** and problems**!***



***NOTE***

*Notes in operating instructions / documentation are marked with a "book" (see external documentation).*

*However, follow the recommended actions to **avoid property damage** and problems**!***

### 3.1.1 Explanation of the safety symbols used

| | |
|---|---|
|  | **DANGER**<br>***Hovering loads / rotating drum***<br>*(Dangers due to the load falling)*<br>***Failure to comply will result in death or serious injury.***<br>*No persons are allowed to be under the load during the transfer, safety distance 0.80 m (arm to drum).* |
|  | **DANGER**<br>***Crushing hazards for the body*** *(moving mechanical parts)*<br>***Non-compliance may result in serious injuries or death.***<br>*No manual activities may be carried out on it during operation.* |
|  | **DANGER**<br>***Crushing, risk of injury to hands*** *(closing movements of mechanical parts).*<br>***Failure to do so can result in serious injury.***<br>*No manual activities may be carried out on it during operation.* |
|  | **DANGER**<br>***Warning of obstacles in the head area*** *(dangers due to suspended loads and rotating parts)*<br>***Failure to do so will result in death or serious injury.***<br>*Be aware of danger to the head.* |
|  | **WARNING**<br>***Requirement: safety shoes*** *must be* ***worn****.*<br>***Failure to do so may result in serious injury.***<br>*Be aware of the danger to the lower limbs.* |

| | |
|---|---|
|  | ***WARNING***<br>***Requirement: protective goggles*** *must be* ***worn****.*<br>***Failure to do so may result in serious injury.***<br>*Be aware of danger to the eyes.* |

| | |
|---|---|
|  | ***WARNING***<br>***Requirement: protective gloves*** *must be* ***worn****.*<br>***Failure to do so may result in serious injury.***<br>*Be aware of dangers to hands.* |

| | |
|---|---|
|  | ***WARNING***<br>***Requirement: skin protection*** *must be* ***used****.*<br>***Failure to do so may result in serious injury.***<br>*Be aware of dangers to hands.* |

| | |
|---|---|
|  | ***WARNING***<br>***Requirement: hands*** *must be* ***washed****.*<br>***Failure to do so may result in serious injury.***<br>*Be aware of the dangers of poor hygiene.* |

## 3.2 Cleaning, maintenance or repair work

<table>
<tr><td rowspan="2"></td><td>DANGER</td></tr>
<tr><td>Before cleaning, maintenance or repair work (only by qualified personnel), the following must be observed.<br><br>Failure to do so will result in death or serious injury.<br><br>1. Removing workpieces from the Powertwister®.<br><br>2. Put down Powertwister® and, if necessary, secure it against movement from the rest position.</td></tr>
<tr><td></td><td>If deviations are necessary, the activities may only be carried out in accordance with the operational risk assessment.</td></tr>
</table>

## 3.3 Safety measures (to be carried out by the operator)

We point out that the operator must ensure that their operating and maintenance personnel:

- is provided with instructions on handling the Powertwister®,
- is equipped with the necessary tools and PPE,
- is regularly monitored with regard to compliance with safety measures, including the obligation to wear PPE.
- The operator must ensure that unauthorised persons are prevented from entering the danger zone during load movement.

## 3.4 Obligations of the operator



***CAUTION***

*In the EEA (European Economic Area), the national transposition of the Framework Directive (89/391/EEC) as well as the associated individual directives and, in particular, the Directive (2009/104/EC) concerning the minimum safety and health protection for the use of work equipment by workers at work, as amended, must be observed and complied with.*

***Failure to do so may result in injury.***

*The operating instructions are written for qualified personnel and the personnel must be appropriately trained before working on the Powertwister ®.*

*In Germany, the Operational Safety Ordinance of June 2015 (BetrSichV) must be observed (implementation of the above-mentioned of the above-mentioned directive into national law).*

On the part of the operator the following must be observed:

- A permanent risk assessment of the workplaces must be conducted (e.g. ensuring sufficient room for movement for load transfer) The measures must be written down in the form of operating instructions and the personnel must be instructed accordingly. The implementation of the measures must be monitored by the supervisor.
- The instructions must be repeated at regular intervals, but at least once a year.
- Before lifting the load, make sure that the workpiece carrier is correctly hooked and fastened.
- Always store Powertwister® safely in the transport case.

- In case of deviation from normal operating conditions, reduce the load capacity (e.g. temperatures below 5°C).
- The following generally applies to the operating personnel: no working under the influence of alcohol, drugs, medication or when overtired.
- In case of deformation or breakage, contact the manufacturer. Take the *Powertwister®* out of operation immediately!







**DANGER**

***CAUTION!!*** *The Powertwister® must not be on the crane. Do not carry out work on the Powertwister® during operation.*

- *The Powertwister® must always be installed and maintained by trained personnel.*
- *Do not exceed the maximum permissible load (see technical data).*
- *Before each use, the Powertwister® must be checked for damage and deformation.*

*Powertwister® with corroded parts, with signs of wear (e.g. due to blasting work), deformations and visible damage must be taken out of operation.*



**DANGER**

Do not use the *Powertwister® if the cycle for periodic testing has been exceeded.*

***Inspection of the equipment in accordance with UVV (accident prevention regulations) by competent persons at regular intervals but at least once a year.***

*The test date must be marked on the equipment. The marking can be made as an embossing on a metal part, an attached type plate or type tag.*



**NOTE**

*At least one annual **safety instruction** (and in each case at the beginning of employment) on hazards and protective measures is required on the basis of the operating instructions in the language understandable to the employees.*

***Failure to do so may result in injury.***

*The safety briefing is to be confirmed by signature.*

## 3.5 Safety checks

to be carried out by the manufacturer.

1. Risk assessment according to Machinery Directive 2006/42/EC (according to Annex I) and DIN EN ISO 12100:2011.

## 3.6 Safety controls

The safety tests for the functions of the Powertwister® have been carried out by the manufacturer at the factory, on the ready-to-use Powertwister® as part of the acceptance test. This process has been logged.
The test certificate corresponds to the serial number.
The metal plate is attached to the Powertwister's U-profile.
Load coefficient: < 20,000 load cycles
Load capacity / marking: Observe load capacity / marking with load capacity tag.
:

# 4 General hazard warnings

## 4.1 Hazards

Keep the area around the Powertwister® free of objects during operation so that unhindered access is possible at all times.

## 4.2 Hazard areas on the Powertwister®

For the operator, the Powertwister® **operating area**.

During the load movement, the entire secured area is the **hazard zone.** The conditions of access are be determined by the operator.

## 4.3 Operating and maintenance personnel

Operating and maintenance personnel are persons who are responsible for transporting, assembling, installing, operating, setting up and cleaning the Powertwister® and for troubleshooting.

1. The Powertwister® may only be operated by instructed and authorised persons.
2. The responsibilities for operating the Powertwister® must be clearly defined and adhered to, so that no unclear competencies arise from a safety point of view.
3. The operator must refrain from any working method that could affect the safety of the Powertwister®.
4. The operator is obliged to report any changes that have occurred to the Powertwister® that could affect safety to the supervisor.
5. The operator is obliged to use the Powertwister® only in perfect condition at all times.
6. The operating personnel must be equipped with the appropriate personal protective equipment by the operator in accordance with the legal requirements and the material to be processed.
7. The operator must regularly encourage the use of personal protective equipment and monitor compliance.



**WARNING**

*In addition to the personal protective equipment already specified by the operator, the following are required:*
*- safety shoes*

***Failure to do so may result in small or minor injuries.***
*The personal protective equipment must be checked and specified by the operator during the safety assessment.*

## 4.4 Installation of spare and wear parts

We expressly draw your attention to the fact that spare parts and accessories which have not been supplied by us have not been tested and approved by us. The installation and/or use of such products may therefore affect the design properties of the Powertwister® negatively.
We shall not be liable for any damage caused by the use of non-original parts and non-original accessories.
Standard parts can be obtained from specialist dealers.



**NOTE**

***Parts lists** and **technical data sheets** are included in the **technical documents**.*

***Otherwise, property damage will result.***

*Failure to comply with the enclosed technical documentation may result in damage.*



**NOTE**

***Lists** of the **spare parts** and **wear parts** are provided in the **technical documents**.*

***Otherwise, property damage will result.***

*Failure to comply with the enclosed technical documentation may result in damage.*

**Service**
If required, these parts can be obtained from COM-Tec® GmbH.

# 5 Installation

## 5.1 Scope of delivery




1

2

COM-TEC

Fehler! Verweisquelle konnte nicht gefunden

*Fig. 5-1 Scope of delivery of the Powertwister®*

**The scope of delivery includes:**

1 Load handling device with case
2 This operating manual with declaration of conformity



***NOTE***

*The detailed scope of delivery of the Powertwister® can be seen in the order confirmation or the project documents.*

***Otherwise, property damage will result.***

*Failure to comply with the enclosed technical documentation may result in damage.*

## 5.2 Transport and packaging

**Storage conditions for intermediate storage**

- see Chap. 2.3.3, Technical data.

### 5.2.1 Technical data for transport

| Assembly / transport unit | Weight |
|---|---|
| PT 080 | approx. 3,5 kg |
| PT 315 | approx. 7,6 kg |

*Tab. 1 Weights*

## 5.3 Storage after use or dismantling

After use, the Powertwister® must be placed back and stored in the transport case.



***DANGER***

***CAUTION!***
*After all work has been completed, check again whether there is any visible damage to the Powertwister®.*

# 6 Operation





***NOTE***

*The Powertwister® is built for appropriate applications. Any misuse must be ruled out.*

- *The centre of gravity of the load must be adjusted so that the inclination is not greater than 6°, so that slipping is safely prevented.*
- *When moving the Powertwister® ensure that the Powertwister®:*
  *- is moved at low speed,*
  *- does not strike anything,*
  *- does not oscillate.*
- *When removing the Powertwister® from the pick-up hook, it must first be lowered until the pick-up hook is free.*
- *While using the Powertwister® , look for obvious defects.*
- *Any diagonal pull with the Powertwister® is not permitted.*

# 7 Maintenance / Cleaning / Repair / Testing



***WARNING***

*The Chapter **Maintenance/Cleaning** is intended for qualified personnel only. Maintenance, cleaning and repair work may only be carried out by qualified personnel.*



***WARNING***

*Cleaning, maintenance and repair work may only be carried out outside of load movements and in the dismantled state!*

**Specialist**
A person with appropriate training, education and experience that enables them to identify risks and avoid hazards.



***NOTE***

*It is recommended to clean the Powertwister® regularly and to check it in a fixed maintenance cycle. The factors specific to the application must be taken into account when determining the maintenance cycle.*



***NOTE***

*The frequency of the maintenance cycle depends above all on the operating conditions during actual operation, depending on all local influencing factors. COM-Tec® GmbH recommends to set up internal rules.*



***NOTE***

*t = daily; m = monthly; j = annually;*
*HB = proceed according to manufacturer's operating instructions.*

Connections on the load handling device may become loose during operation. To prevent damage, check the Powertwister® for loose connections at regular intervals (recommended interval for three-shift operation is 3 months).

## 7.1 Cleaning, maintenance, repair and testing



***NOTE***

***Maintenance instructions**:*

*Check metal parts for possible weakening, dents or bending.*

| **Cleaning** |
|---|
| Cleaning can be carried out as needed. |
| Regularly dispose of leftover materials, cleaning waste and cleaning materials in an environmentally friendly manner. |

*Tab. 2 Cleaning*



***WARNING***

***Caution***
*During cleaning work, wear personal protective equipment in accordance with the company's occupational health and safety regulations (e.g. protective gloves, tight-fitting safety goggles if necessary).*

| **Maintenance** | **Interval** |
|---|---|
| Checking the external condition of the Powertwister®.<br>Check for cracks, deformations (dimensions according to checklist), severe corrosion and other wear. | **t** |

*Tab. 3 Maintenance*

## 7.2 Checks / tests

Powertwister® must be checked in consideration of the operating conditions which are important for the intended service life. It must be checked at least once a year or after a repair by the manufacturer or an authorised specialist. Visual inspection before use.



***WARNING***

***Inspection of the equipment in accordance with UVV (accident prevention regulations) by competent persons at regular intervals but at least once a year.***

*The test date must be marked on the equipment. The marking can be made as an embossing on a metal part, an attached type plate or type tag.*

| **Repairs / tests** | **Interval** |
|---|---|
| Individual components can be replaced by the manufacturer | **if required** |
| **Regular checks**<br>According to BGR 500 Chapter 2.8 Paragraph 3.15.2, load handling devices must be inspected at least once a year by a qualified person. Depending on the conditions of use and operational conditions, additional tests may be required. An additional visual check by the user should be carried out before each use. | **annually** |
| **Extraordinary tests**<br>According to BGR 500 Chapter 2.8 Paragraph 3.15.3, load handling devices must be subjected to an extraordinary test after cases of damage or special incidents that may affect the load-bearing capacity and after repair work has been carried out. Accessories must be checked according to the respective regulations. | **if required** |

*Tab. 4 Repairs*

## 7.3 Warranty provisions

The manufacturer's / distributor's warranty is as follows
12 months from the date of delivery or handover on site after commissioning if used as intended.

# 8 Malfunction, cause, remedy



***DANGER***

*The facts and information described in this manual regarding "malfunction, cause, remedy" are designed so that they can be understood by persons with professional training in*
*- mechanics / maintenance.*

***Failure to do so will result in death or serious injury.***

*Appropriate tools and testing equipment are be made available to these personnel.*
*If the specified measures do not lead to success, please contact COM-Tec® GmbH.*

| Malfunction | Cause | Remedy |
|---|---|---|
| Powertwister® cannot be attached. | Load bracket bent | Disable Powertwister®, contact manufacturer |
| Powertwister® bent. | Overloading | Disable Powertwister®, contact manufacturer |
| Fasteners are severely deformed. | Overloading | Disable Powertwister®, contact manufacturer |
| Cracks on the fasteners. | Overloading | Disable Powertwister®, contact manufacturer |

*Tab. 5 Malfunction - Cause - Remedy*

**For further assistance, please contact:**

COM-Tec® GmbH, D-76227 Karlsruhe / Germany
Phone: +49 (0) 721 / 750 93 55 - 0
Fax: +49 (0) 721 / 750 93 55 - 9
Email: info@comtecgmbh.de
Web: www.comtecgmbh.de

# 9 Emergency

In an emergency, set the load down immediately.

# 10 Dismantling / disposal

**Dismantling**
Dismantling may only be carried out by qualified personnel.



**Disposal**
The Powertwister® must be rendered unusable by mechanical destruction before disposal.

The load handling device is predominantly made of steel and is to be disposed of in accordance with the local environmental regulations **in force at the time.**

Oils, solvents, cleaning agents and contaminated cleaning tools (brushes, rags, etc.) must be disposed of inaccordance with local regulations, in accordance with the applicable waste code and in compliance with the instructions in the manufacturers' safety data sheets.